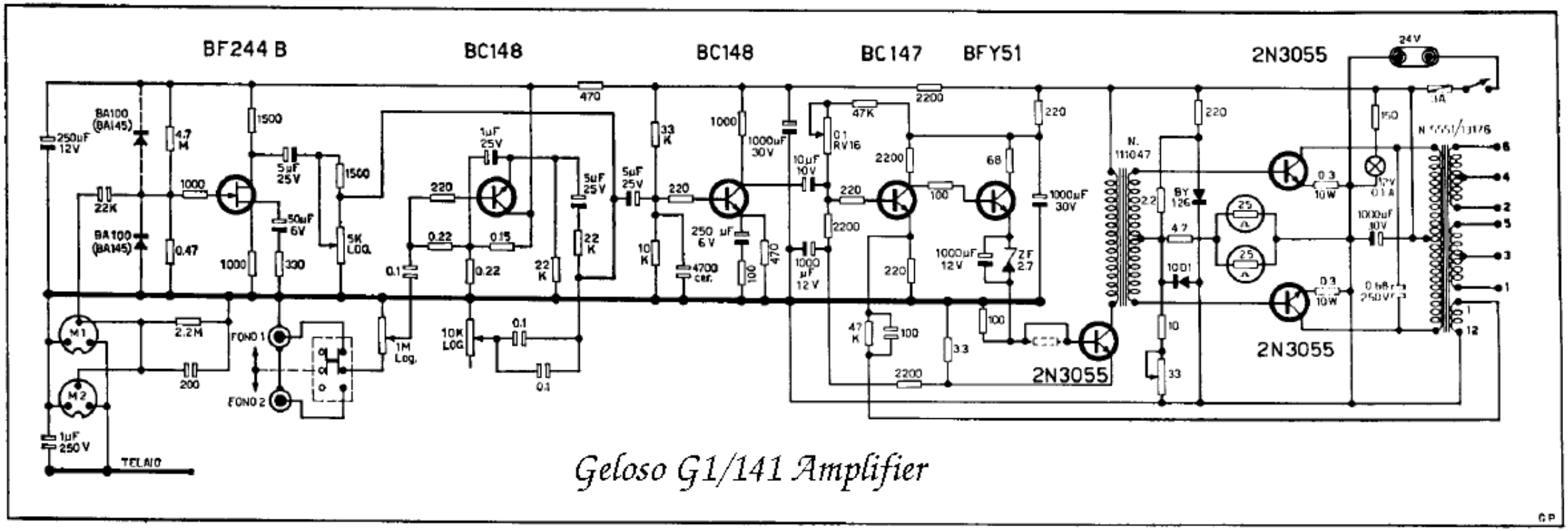

Geloso G1/141 Amplifier

GP